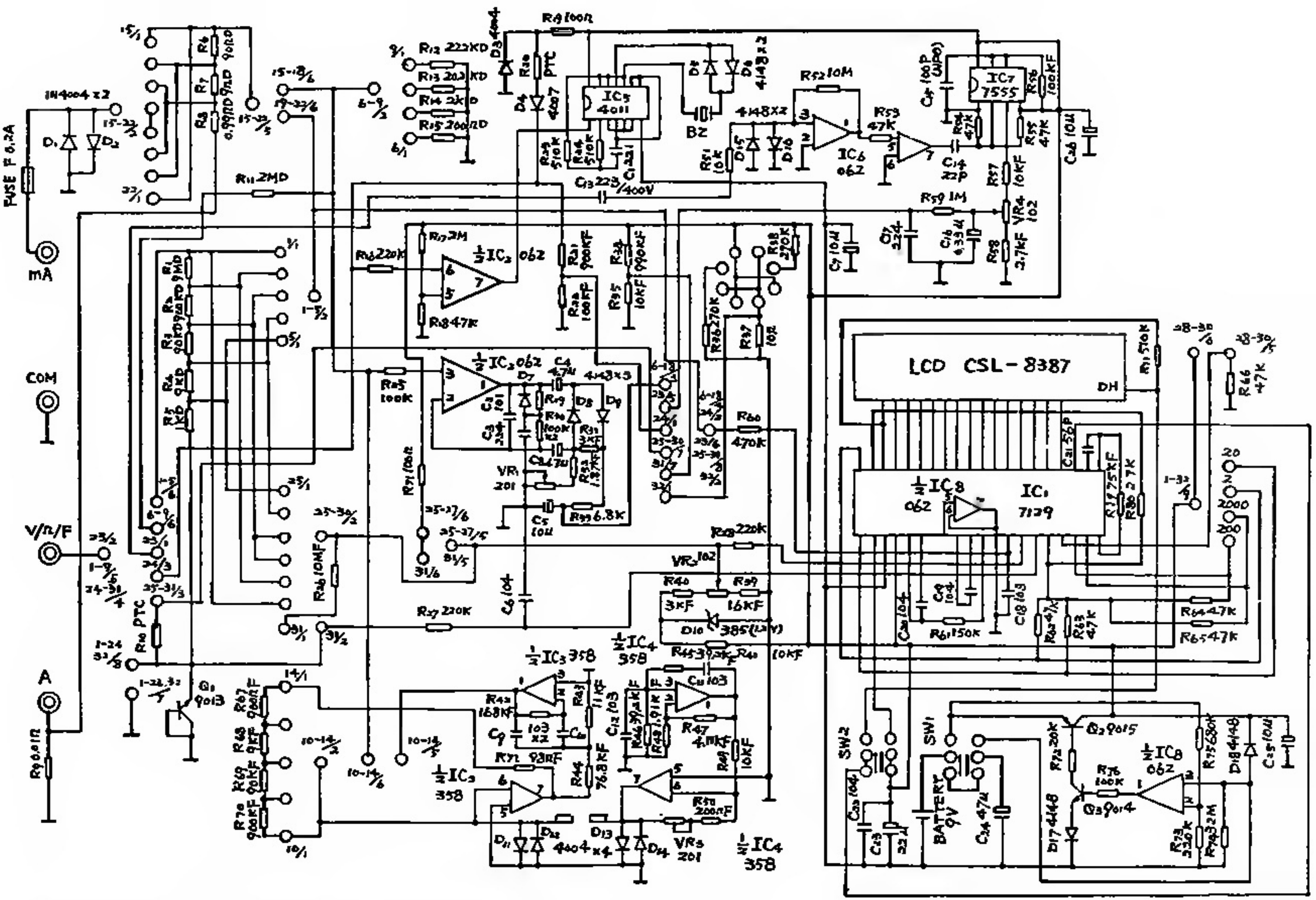

1	2	3	4	5	6	7	8	9	10	11	12	13	14	15	16
DC 200mV	DC 2V	DC 20V	DC 200V	DC 1000V	AC 700V	AC 200V	AC 20V	AC 2V	Cx 2000PF	Cx 20nF	Cx 200nF	Cx 2μF	Cx 20μF	AC 2mA	AC 20mA
17	18	19	20	21	22	23	24	25	26	27	28	29	30	31	32
AC 200mA	AC 10A	DC 10A	DC 200mA	DC 20mA	DC 2mA	F 20kHz	⊣⊢/⊣⊢	Ω 200	Ω 2K	Ω 20K	Ω 200K	Ω 2M	Ω 20M	Ω 200M	hFE

MY-65